Traffic cone 900 mm PVC/REC

SKU: PA90PVCRECR0_70

Gross Price: Kč 835.14

Net Price: Kč 690.20

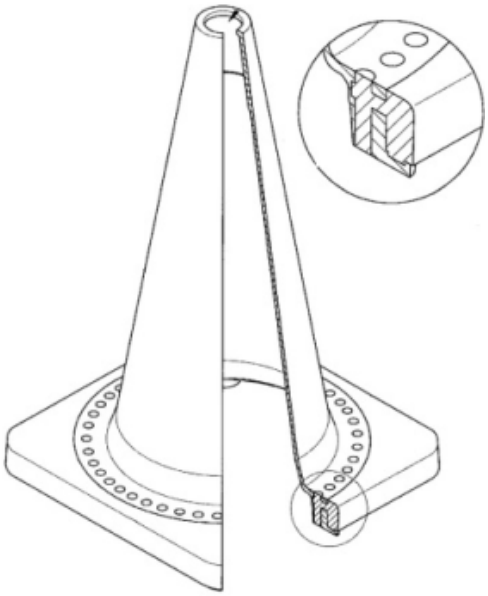

Technical Specification

Attribute	Value
Dimension	900 mm
Color	Orange
Material	PCV
Weight	7 kg
Shipping time	2-3 days

Description

Traffic Cone 900 mm – Orange, Two White Stripes, Flexible PVC with 7 kg Rubber Base

Professional Traffic Cone – Durability, Visibility and Safety

Our **900 mm traffic cone** is a solid and durable road safety device designed for intensive everyday use. Made from **flexible, impact-resistant PVC** and equipped with a **heavy recycled-rubber base** weighing **7 kg**, it provides exceptional stability in all conditions.

The distinctive **bright orange colour** and **two white stripes** ensure excellent visibility even though the stripes are *not reflective*. This makes the cone ideal for daytime use and well-lit areas where clear visual signalling is required.

Key Features – Why Choose Our Traffic Cone?

- **Height:** 900 mm
- **Colour:** bright orange with two non-reflective white stripes
- **Material:** flexible, durable PVC
- **Base:** strong and stable recycled rubber
- **Weight:** 7 kg
- **Excellent weather resistance:** no deformation, shock resistance
- **High stability even in strong wind**
- **Compliant with road safety device (RSD/BRD) requirements**

Its flexible PVC structure makes the cone resistant to crushing and repeated impacts, ideal for locations with heavy or demanding usage.

Regulation Compliance – Legal and Safe Use

These traffic cones comply with the legal requirements for **road safety devices (BRD/RSD)** and can

be used according to national and European road-traffic guidelines, including:

- **Roadwork marking**,
- **Delineating hazardous zones**,
- **Marking obstacles, narrowings and construction areas**,
- **Temporary traffic management**,
- **Securing areas with infrastructure failures**.

They meet standards defined in regulations concerning road signs and signals, as well as technical guidelines for the use of safety devices in temporary traffic organization.

Applications – Practical and Versatile Use

Standard applications include:

- roadwork and construction area marking,
- temporary traffic management,
- marking parking zones and restricted access areas,
- securing work zones for service crews,
- directing pedestrian and vehicle movement.

Additional Suggested Uses (5 ideas):

1. **Driver training and driving tests** – ideal for creating manoeuvre courses.
2. **Sporting events** – marking running tracks, cycling routes, or outdoor events.
3. **Warehouses and logistics centres** – indicating work zones and communication routes.
4. **Car workshops and inspection stations** – marking service zones.
5. **Schools and educational institutions** – securing areas during events or outdoor activities.

Why Buy Our Cones?

For many years, our company has **specialized in road safety equipment (BRD/RSD)**. We are a **manufacturer and direct importer**, ensuring competitive prices and top-tier product quality.

What sets us apart?

- **A very large range of road-safety equipment** – cones, separators, bollards, traffic mirrors and more.
- **Fast order processing** – most products ship **directly from our warehouse**.
- **We operate across multiple European markets**, supplying both retail and wholesale customers.
- **A recognised and respected brand**, trusted for professionalism and reliability.
- **High quality at an excellent price** – outstanding value for money.

Summary – A Traffic Cone That Meets Your Needs

If you are looking for traffic cones that are:

✔ stable
✔ highly visible (non-reflective)
✔ durable and impact-resistant
✔ compliant with regulations
✔ available immediately
✔ competitively priced

– our **900 mm traffic cone made of flexible PVC with a 7 kg rubber base** is the perfect choice for both professional and private users.

If you need a wholesale offer, feel free to contact us — we provide fast delivery and excellent pricing!

Höhe: 900 mm
Standfuß: 550 x 550 mm
Material: aus flexiblem PVC
Farbe: Orange mit weißem Streifen
Gewicht: 7,5 kg
Standfuß aus recyclebaren Material
Leitkegel in nichtreflektierender Ausführung, geeignet für den individuellen und flexiblen Einsatz als Leit- und Absperrelement.
Dieser Leitkegel verfügt über einen extra schweren Standfuß.